# Innovative Control-by Wire Technology for Elevator Safety

Dr.-Ing. Etienne Nitidem

WITTUR

WITTUR CUBE

#innovation
#green
#modernization
#highperformance
#newbuildings

VFA INTERLIFT E.V. VERBAND FÜR AUFZUGS-TECHNIK

Interlift 2015
VFA-Forum

interlift 2015

safety in motion™

## Agenda

WITTUR

- State-of-the-art technology of safeties components in Elevators
- Possible improvements of today's technology
- Potentials of electronic integration in Elevators
- Concept of innovative Electrical Safety Gear (ESG)
  - Mechanic
  - Electronic & Control
- Tests and Validation
- Summary

safety in motion™


Copyright 2015 by Wittur

## State-of-the-art – Safeties Components in Elevators

WITTUR

safety in motion™

Safeties components are used in elevators to

- avoid **Freefall,**
- Stop the cabin in normal **Operational** mode,
- or in case of **Emergency**, due to uncontrolled movements.


Copyright 2015 by Wittur


## State-of-the-art – Safeties Components in Elevators

WITTUR

safety in motion™

- Safety gear, over speed governor + tension weight **(Freefall)**
- Rope brake, Buffers
- Motor brake **(Operational)**
- UCM devices **(Emergency)**
- Parallel wiring to controller
- Separate shaft copying

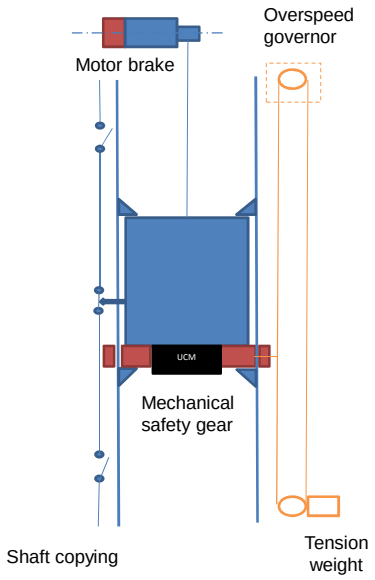



Copyright 2015 by Wittur

## State-of-the-art – Possible areas for improvement

WITTUR

- Longer installation time due to high number of components
- Impact on costs (installation time and number of components)
- Less then optimal use of shaft space
- Less reliability due to high mechanical interfaces
- Possibly unbalanced forces due to mechanical synchronisation of different safety gears
- Reduced accuracy of over speed measurement
- Time consuming reset of safety brake after triggering event

safety in motion™


Copyright 2015 by Wittur


## Potential of Electronic Integration (PESSRAL)

WITTUR

- The introduction of PESSRAL (Programmable Electronic Systems in Safety Related Applications for Lifts) as normative amendment in EN81 enables the use of electronic components to design safeties devices.
- Electronic integration leads to mechatronics products with following abilities:
  - Integrated intelligence (Sensors, Self monitoring, Permanent status information, actuators)
  - Communication (Interoperability and integration in networks)
  - Less maintenance (Remote maintenance)
  - Integration of functionalities (Less components)
  - Increased safety (Compliance to IEC 61508)

safety in motion™


Copyright 2015 by Wittur

## Concept of the Electromechanical Safety Gear (ESG)

WITTUR

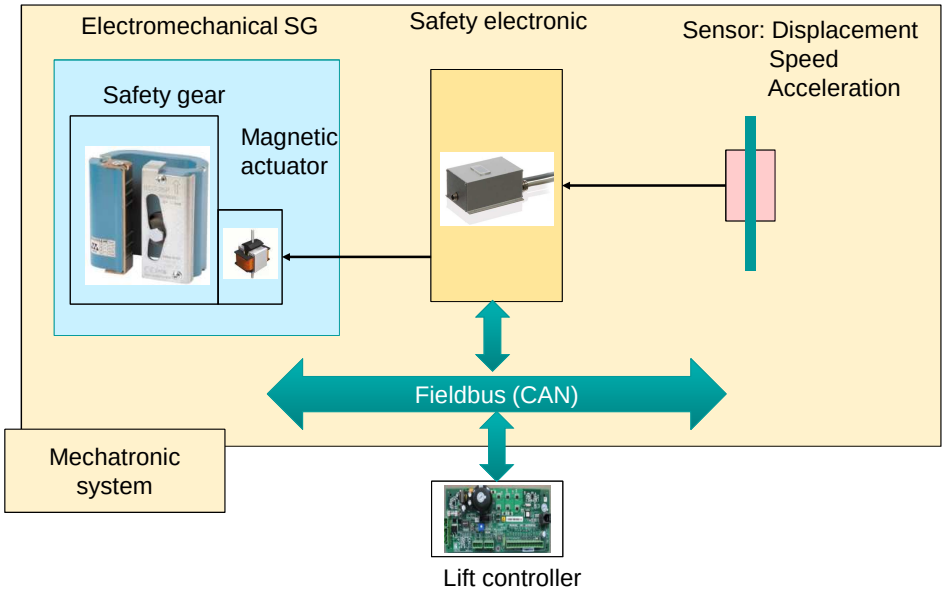


safety in motion™


Copyright 2015 by Wittur


## Electromechanical Safety Gear (ESG)

WITTUR

**Uni-directional**

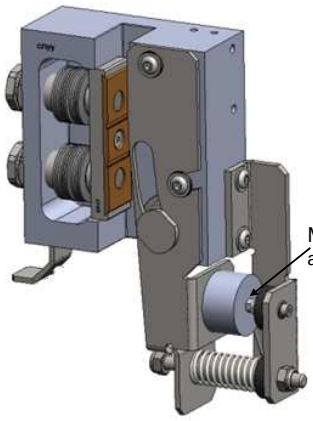


**Bi-directional**

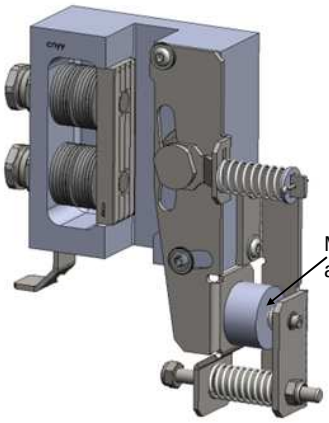


Rated speed V: max. 2.0 m/s
Nominal load Q: max. 1050 kg (P+Q: 2.500 kg)

safety in motion™


Copyright 2015 by Wittur

## Safety Electronic

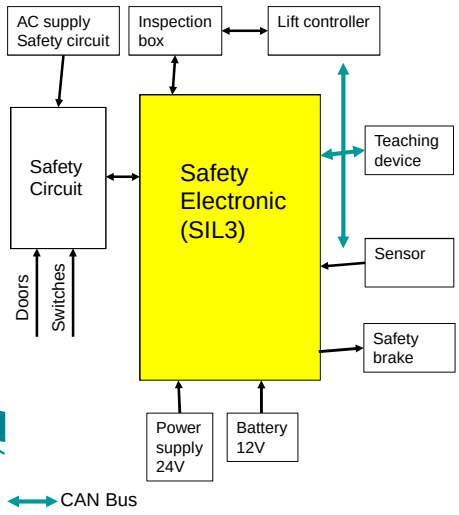


Operational modes:

- Pre-commisioning
  - Opening of safety circuit
  - Travelling only with recall
- Teaching
  - Learning of different floor information
  - Calculation of final and inspection limits
- Normal
  - Detection of over speed
  - Activation of Electromechanical Safety Gear (ESG)
  - Opening of Safety chain


Copyright 2015 by Wittur


## Tests and Validation - Setup

Test tower: 50 m travel height
15t free fall environment

ESG integration into car sling

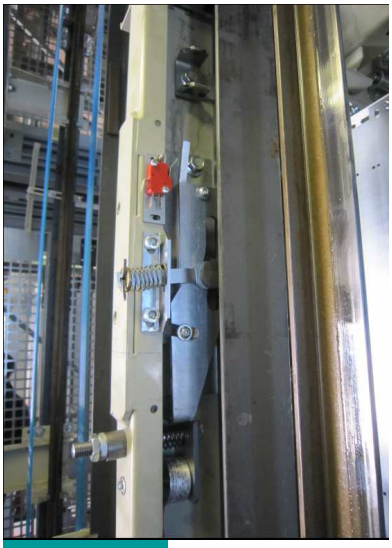

Testing mode


Copyright 2015 by Wittur

## Tests and validation – Uni-directional ESG

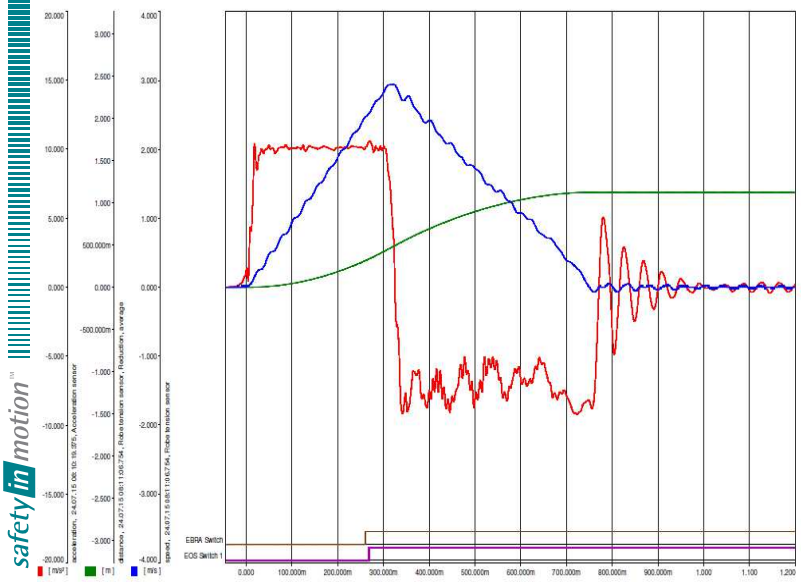


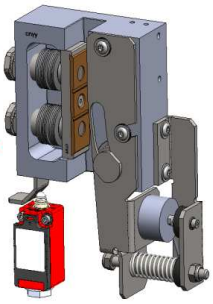


Copyright 2015 by Wittur


## Tests and Validation – Bi-directional ESG

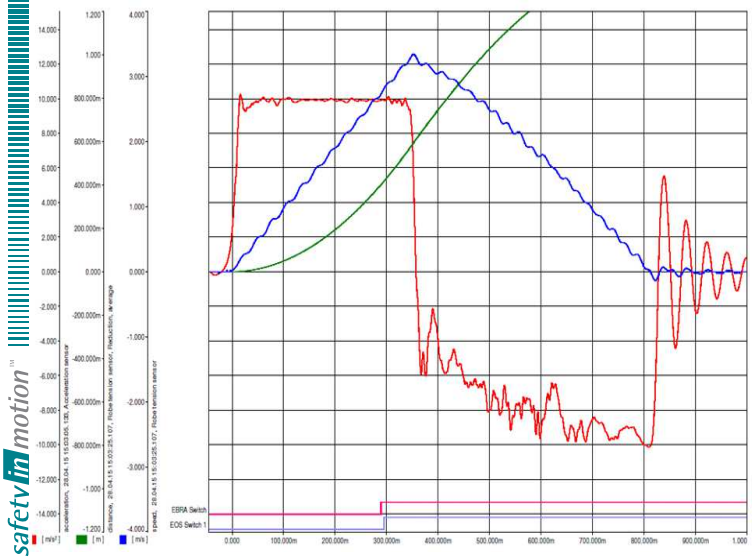


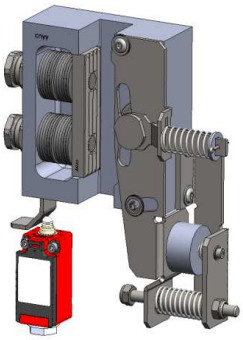


Copyright 2015 by Wittur

## Application – Lightweight cabin guided on 4 guide rails

WITTUR

**Vision 20**

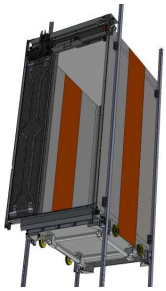

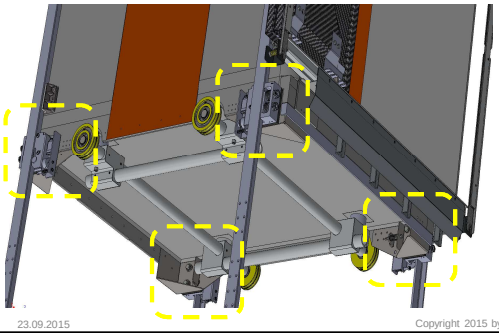

- Pre-triggered stopping system realised with 4 Electromechanical Safety Gear (ESG) on each guide rails
- Real time synchronisation of all Electromechanical Safety Gears
- No unbalanced forces on guide rails and lightweight cabin
- High traveling/stopping comfort
- High stopping accuracy
- Full conformity to EN81-21(reduced pit and head room)
- Optimized space utilisation

safety in motion™


Copyright 2015 by Wittur


## Summary

WITTUR

**Patented**

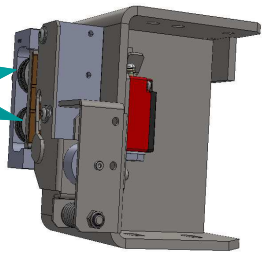

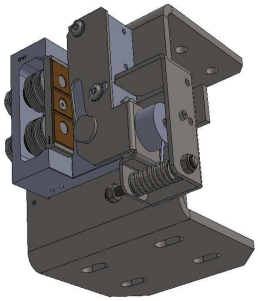

- Electromechanical Safety Gear
- Controlled by wire (less wear, high reliability)
- Easy integration in car slings
- Reduction of shaft components
  - Mechanical over speed governor
  - End limit switches
  - Door zone switches
  - Buffers, …
- Optimized space utilisation
- Easy synchronisation
- Reduction of installation time
- Permanent safety information
- Easy maintenance
- High interoperability (CANOpen)

safety in motion™


Copyright 2015 by Wittur

## Thank you for your attention

WITTUR

safety in motion™

Dr.-Ing. Etienne Nitidem
Corporate Director R&D

etienne.nitidem@wittur.com
Phone: +49 8134 18-218
Mobile: +49 160 90183118

See you in the

Copyright 2015 by Wittur