Giuseppe De Francesco

Group Engineering Manager, Sematic Elevator Products, Italy

CUBIC: Green-Manufacturing doors compliant to EN81-20/50

CUBIC PRODUCT LINES

Sematic has recently developed a new series of elevator doors: the CUBIC product lines (2000 B-CUBIC, 2000 C-CUBIC; 2000 C-MOD CUBIC);

- **Compliant to EN 81-20/50**
- Developed with **green- manufacturing**
- Using the **best production practices**

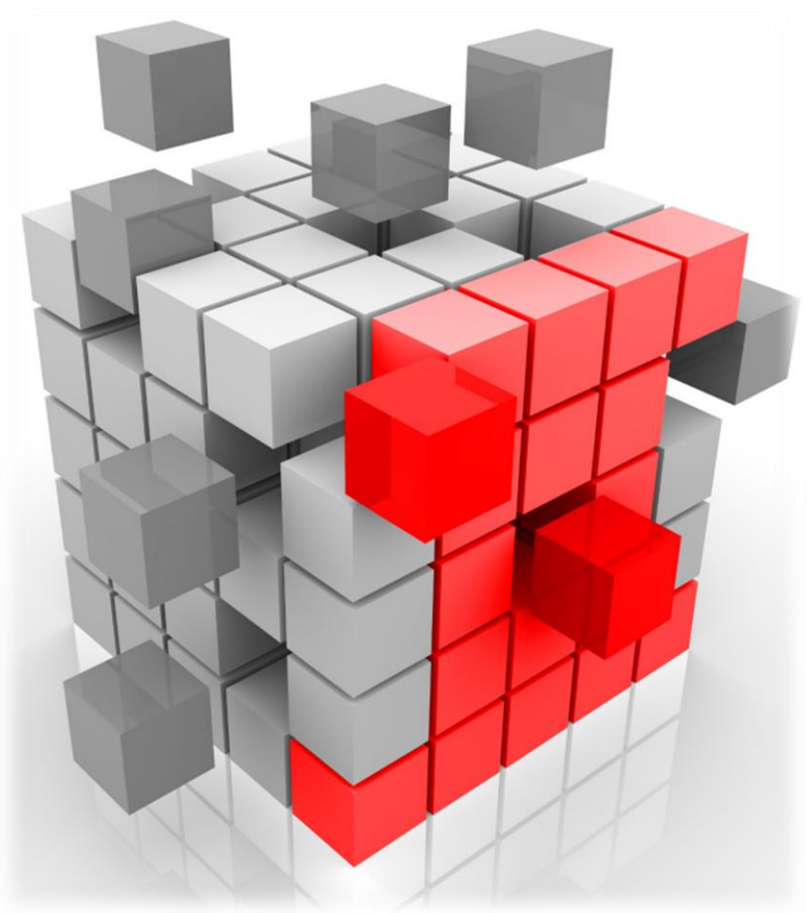

Highlights: COMPLIANT

The new Sematic doors are designed, produced and tested to satisfy international technical and qualitative standards (including the new **EN 81-20/50**), with special care to reliability, safety and cost efficiency. **Fire rated executions** (EN81-58 E120, EW60 and BS476), **car door lock** and all the requirements to satisfy the new EN81 standard are also available.

Highlights: COMPLIANT

Pendulum Test

Highlights: COMPLIANT

Highlights: GREEN BEST PRACTICES

The CUBIC doors have been designed and manufactured with special attention to the “greening” of the manufacturing processes - by optimizing the production process (**no welding, pre-painting**) and consequently pollution, waste and emissions.

Highlights: LIGHT

Reduced number of fixation brackets and reduced weight (up to 30%) ensures Cubic doors to be suitable for any elevator installed in **residential** and **office** buildings.

Thanks to the **reduced weight** and **thickness** of the panels **(only 1 mm)** as well as to the reduced number of components (including screws) CUBIC doors are lighter and can be easily transported and handled on site even by one person only

Highlights: LIGHT

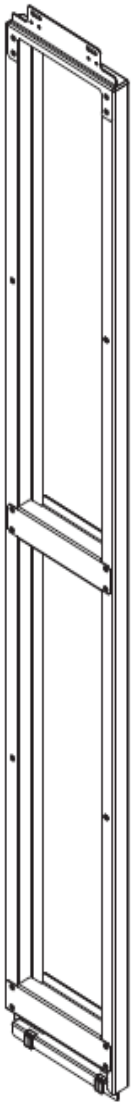

Highlights: EASY & QUICK

Cubic product lines include also a series of smart technical solutions that guarantee **maximum easiness of installation** such as, for example, Sematic unified landing door lock, designed for quicker adjustment or the simplified door controller (ECO), used in order to improve the reliability and the door commissioning time.

Special tools for installation and maintenance technicians are also available for the optimization of doors setting and further reduction of installation times.

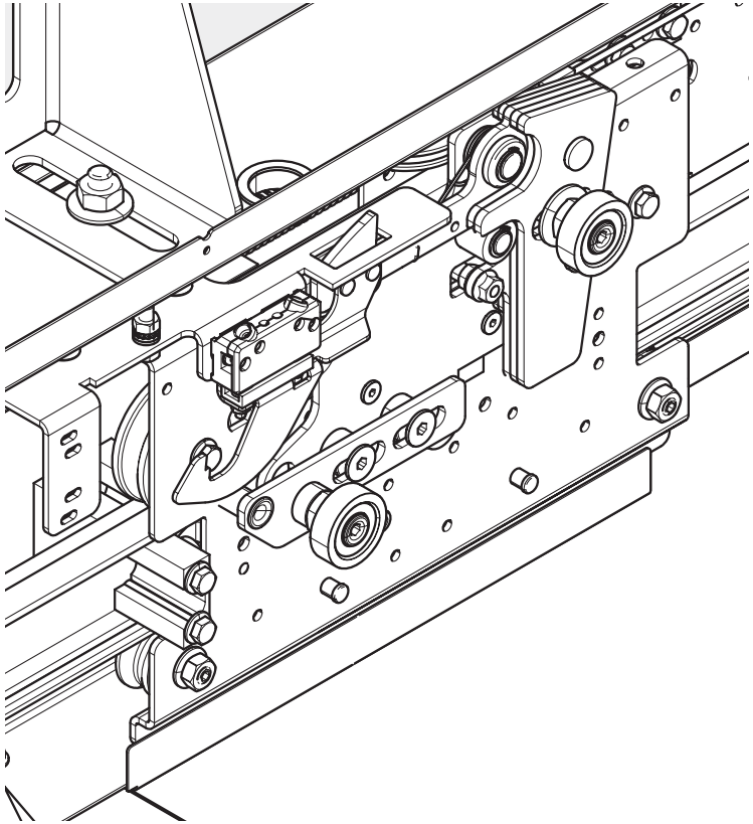

Highlights: EASY & QUICK

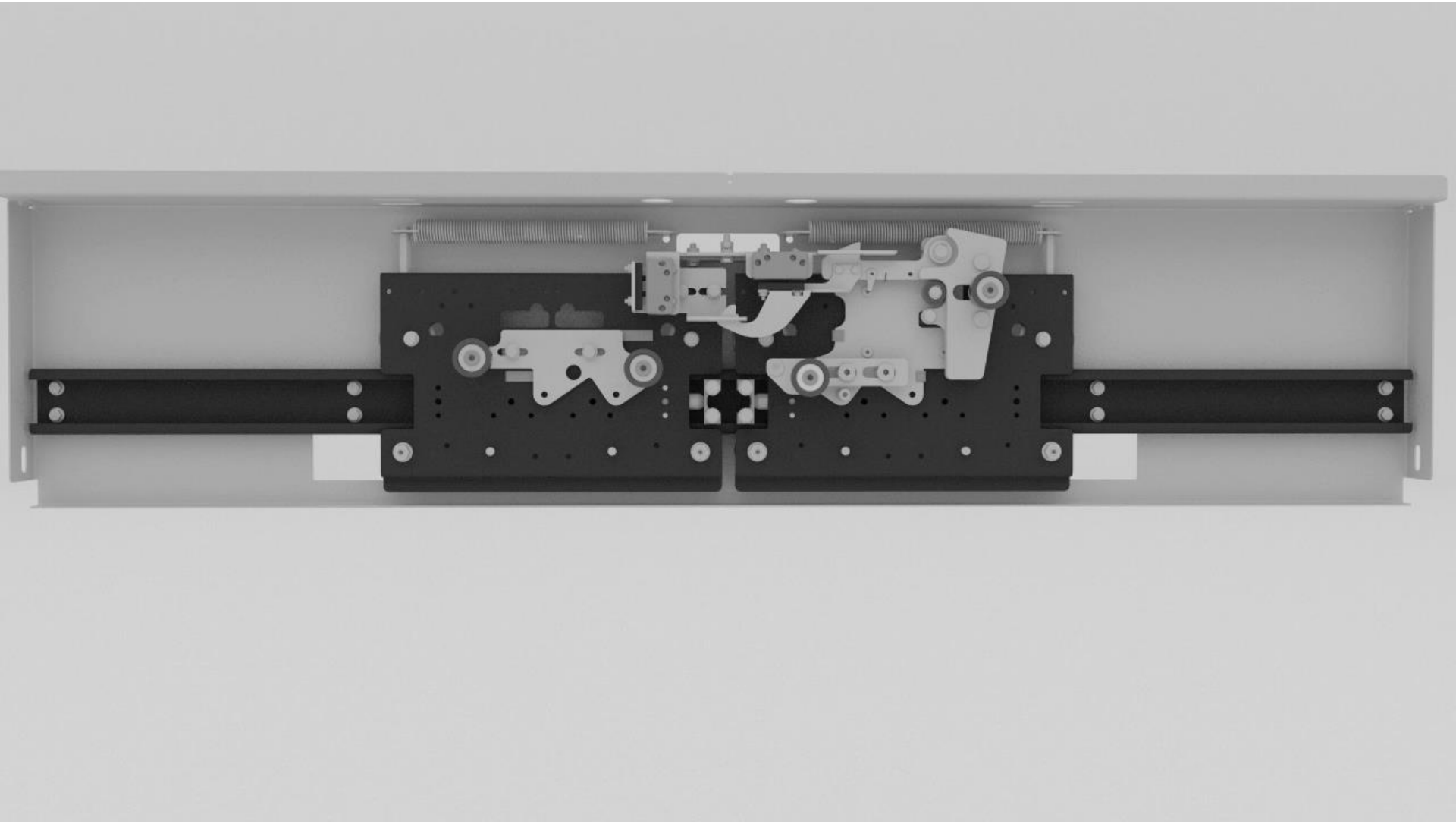

Highlights: FLEXIBLE

The new car and landing doors of the CUBIC series can be easily coupled with other Sematic product lines, guaranteeing **high interchangeability** and the availability of more options and configurations for any elevator and for any refurbishment project.

Highlights: INNOVATIVE

New **patented solutions** are intended to be a new standard in terms of panels and frames design.

Highlights: MODULARITY

ONE Modular Platform – ONE Mechanical Shell only
Different levels of segmentation

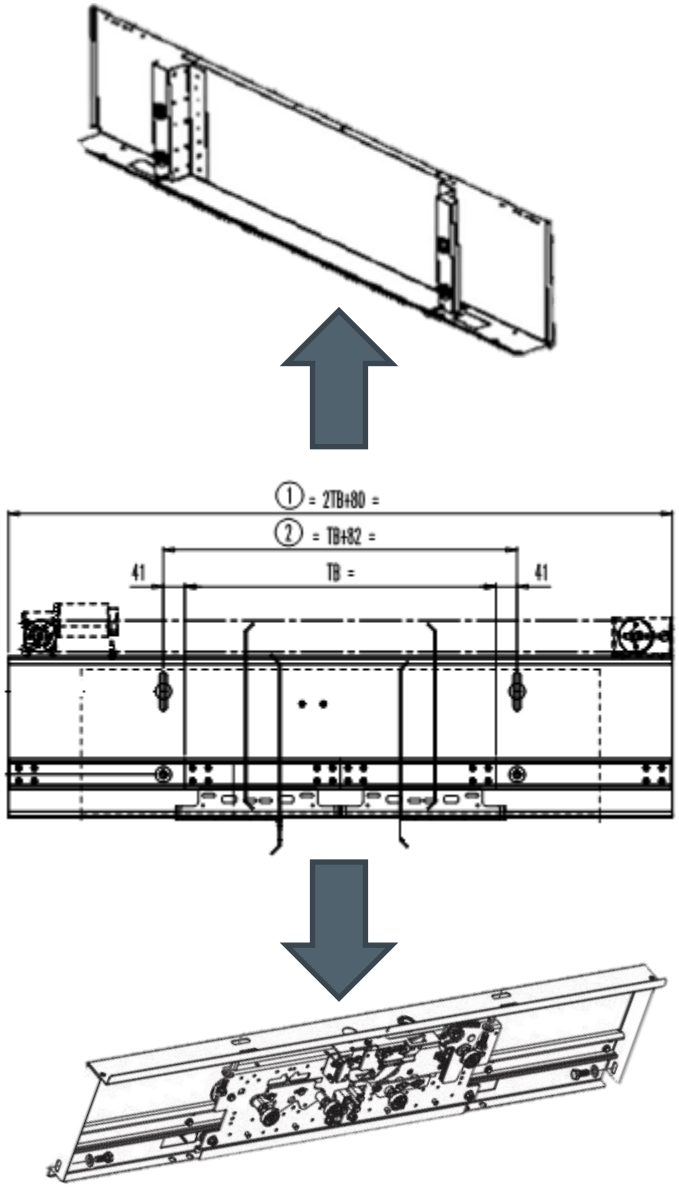

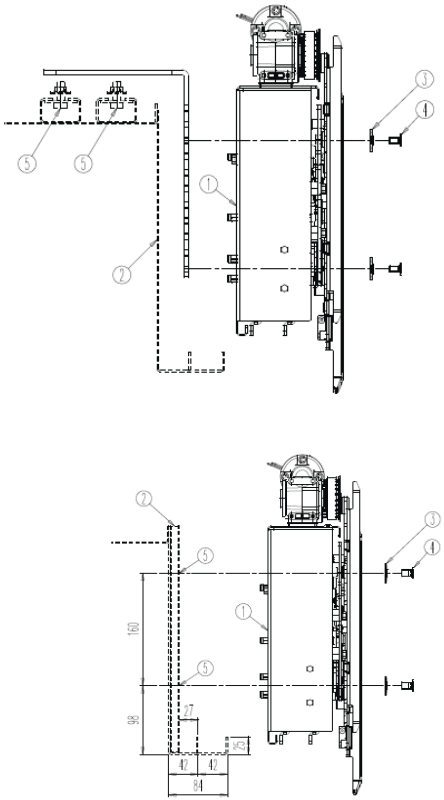

THANKS FOR YOUR ATTENTION!